MIAMI–DADE COUNTY, FLORIDA
PRODUCT CONTROL SECTION
11805 S.W. 26 Street, Room 208
Miami, Florida 33175-2474
T (786) 315–2590, F (786) 315–2599
www.miamidade.gov/economy

DEPARTMENT OF REGULATORY AND ECONOMIC RESOURCES (RER)

BOARD AND CODE ADMINISTRATION DIVISION

NOTICE OF ACCEPTANCE (NOA)

F & L Aluminum Parts, Inc.
2087 N Powerline Road, Ste 1
Pompano Beach, Florida 33069

SCOPE:

This NOA is being issued under the applicable rules and regulations governing the use of construction materials. The documentation submitted has been reviewed and accepted by Miami-Dade County RER-Product Control Section to be used in Miami-Dade County and other areas where allowed by the Authority Having Jurisdiction (AHJ).

This NOA shall not be valid after the expiration date stated below. The Miami-Dade County Product Control Section (In Miami-Dade County) and/or the AHJ (in areas other than Miami-Dade County) reserve the right to have this product or material tested for quality assurance purposes. If this product or material fails to perform in the accepted manner, the manufacturer will incur the expense of such testing and the AHJ may immediately revoke, modify, or suspend the use of such product or material within their jurisdiction. RER reserves the right to revoke this acceptance, if it is determined by Miami-Dade County Product Control Section that this product or material fails to meet the requirements of the applicable building code.

This product is approved as described herein, and has been designed to comply with the Florida Building Code, including the High Velocity Hurricane Zone.

DESCRIPTION: Aluminum Stands for Rooftop Equipment

APPROVAL DOCUMENT: Drawing No. 23-242, titled "Aluminum Stands for Rooftop Equipment", sheets 1 through 10 of 10, with latest revision date 11/15/2023 prepared by Tilteco, Inc., signed and sealed by Walter A. Tillit Jr., P.E., bearing the Miami-Dade County Product Control Revision stamp with the Notice of Acceptance number and the expiration date by the Miami-Dade County Product Control Section.

MISSILE IMPACT RATING: None

LABELING: Each unit shall bear a permanent label with the manufacturer's name or logo, city, state, model/series, and following statement: "Miami-Dade County Product Control Approved", unless otherwise noted herein.

RENEWAL of this NOA shall be considered after a renewal application has been filed and there has been no change in the applicable building code negatively affecting the performance of this product.

TERMINATION of this NOA will occur after the expiration date or if there has been a revision or change in the materials, use, and/ or manufacture of the product or process. Misuse of this NOA as an endorsement of any product, for sales, advertising or any other purposes shall automatically terminate this NOA. Failure to comply with any section of this NOA shall be cause for termination and removal of NOA.

ADVERTISEMENT: The NOA number preceded by the words Miami-Dade County, Florida, and followed by the expiration date may be displayed in advertising literature. If any portion of the NOA is displayed, then it shall be done in its entirety.

INSPECTION: A copy of this entire NOA shall be provided to the user by the manufacturer or its distributors and shall be available for inspection at the job site at the request of the Building Official.

This NOA **revises and renews NOA No. 20-0720.09** and consists of this page 1 and evidence page E-1, as well as approval document mentioned above.

The submitted documentation was reviewed by **Sifang Zhao, P. E.**

S.Z.

01/16/2024

F & L Aluminum Parts, Inc.

NOTICE OF ACCEPTANCE: EVIDENCE SUBMITTED

A. DRAWINGS

1. Drawing No. 23-242, titled "Aluminum Stands for Rooftop Equipment", sheets 1 through 10 of 10, with latest revision date 11/15/2023 prepared by Tilteco, Inc., signed and sealed by Walter A. Tillit Jr., P.E.

B. TESTS

1. None.

C. CALCULATIONS

1. Structural analysis and calculations, complying with FBC-2023, 8th edition, submitted, sheets 1 through 116 of 116, prepared by Tilteco, Inc., signed and sealed by Walter A. Tillit Jr., P.E. on 10/30/2023.

D. QUALITY ASSURANCE

1. Miami-Dade Department of Regulatory and Economic Resources (RER).

E. MATERIAL CERTIFICATIONS

1. None.

F. STATEMENTS

1. Statement of conformance complying with FBC-2023, 8th edition, prepared by Tilteco, Inc., signed and sealed by Walter A. Tillit Jr., P.E. on 10/30/2023.

G. OTHERS

1. Notice of Acceptance No. **20-0720.09**, issued to F & L Aluminum Parts, Inc., for their **"Aluminum Stands for Rooftop Equipment."**, approved on 08/20/2020 and expiring on 05/15/2024.

Sifang Zhao, P. E.
Product Control Examiner
NOA No. 23-1206.01
Expiration Date: May 15, 2029
Approval Date: January 04, 2024

PRODUCT APPROVAL FOR ALUMINUM STANDS FOR ROOF TOP EQUIPMENT

1- THIS EQUIPMENT UNIT STAND SYSTEM SHOWN ON THIS PRODUCT APPROVAL DOCUMENT (P.A.D) HAS BEEN VERIFIED FOR CODE COMPLIANCE IN ACCORDANCE WITH THE 2023 (8th EDITION) OF THE FLORIDA BUILDING CODE, FOR USE WITHIN THE HIGH VELOCITY HURRICANE ZONE (HVHZ). DESIGN PRESSURES CALCULATED FOR USE WITH THIS SYSTEM SHALL BE DETERMINED SEPARATELY ON A JOB-SPECIFIC BASIS IN ACCORDANCE WITH THE GOVERNING CODE USING ASD METHODOLOGY, IN ACCORDANCE WITH ASCE 7-22 AND SECTIONS 1616.1, 1620.1, 1620.6 OF THE FLORIDA BUILDING CODE, AND SHALL BE LESS THAN OR EQUAL TO THE LATERAL AND UPLIFT DESIGN PRESSURE CAPACITY VALUES LISTED HEREIN FOR ANY ASSEMBLY AS SHOWN.

2- THE ARCHITECT/ENGINEER OF RECORD FOR THE EXISTING STRUCTURE THAT WILL SUPPORT THESE ALUMINUM STANDS SHALL BE RESPONSIBLE FOR ITS INTEGRITY AND SHALL VERIFY THE ADEQUACY OF THE EXISTING STRUCTURE TO WITHSTAND THE SUPERIMPOSED LOADS (ASD) - REF "REACTION SCHEDULE" INDICATED ON SHEET 5, WHERE REACTION FORCES ARE LISTED FOR USE WITH EXISTING STRUCTURE. DESIGN PROFESSIONAL OF RECORD SHALL VERIFY APPLICABILITY AND/OR ADDITIONAL FACTORS FOR USE WITH EXISTING STRUCTURE VERIFICATION.

3- STAND SHALL BE INSTALLED WITH MINIMUM CLEAR HEIGHT AS SPECIFIED IN THE ABOVE-NOTED BUILDING CODE. "STAND HEIGHT" AS USED HEREIN IS NOT NECESSARILY EQUIVALENT TO "STAND CLEAR HEIGHT" AS SPECIFIED IN THE BLDG CODE. STANDS SHALL BE INSTALLED WITH A MINIMUM CLEAR HEIGHT IN ACCORDANCE WITH SECTION 1522 TABLE 1522.3 OF THE FLORIDA BUILDING CODE.

4- VIBRATION ISOLATOR PADS SHALL BE PROVIDED BY OTHERS BETWEEN UNITS & STAND.

5- IT IS THE CONTRACTOR'S RESPONSIBILITY TO VERIFY THAT FASTENING AS SHOWN HEREIN WILL NOT VOID THE EQUIPMENT MANUFACTURER'S WARRANTY, ESPECIALLY WHERE UNITS ARE INSTALLED WITH OVERHANG PAST RAIL (SEE TIE-DOWN DETAILS). STRUCTURAL ADEQUACY OF EQUIPMENT FOR WIND RESISTANCE IS NOT PART OF THIS APPROVAL AND MUST BE VERIFIED SEPARATELY.

6- ELECTRICAL GROUND , WHEN REQUIRED , TO BE DESIGNED & INSTALLED BY OTHERS. ALL MECHANICAL SPECIFICATIONS (CLEAR SPACE, TONNAGE, ETC.) SHALL BE AS PER MANUFACTURER RECOMMENDATIONS AMD ARE THE EXPRESS RESPONSIBILITY OF THE CONTRACTOR.

7- MAXIMUM DIMENSIONS AND WEIGHT OF MECHANICAL UNITS SHALL CONFORM TO SPECIFICATIONS STATED HEREIN, SEE SHEETS 5 AND 7 THRU 10 FOR LIMITATIONS.

8- ALL SCREWS & BOLTS SHALL BE AS SPECIFIED ON THIS DRAWING, AND SHALL COMPLY WITH SECTION 2411.3.3.4 OF THE FLORIDA BUILDING CODE.

9- ALL ALUMINUM EXTRUSIONS SHALL BE 6061-T6 ALLOY & TEMPER, UNLESS NOTED OTHERWISE. WELDING SHALL BE PERFORMED IN ACCORDANCE WITH AWS D 1.2 REQUIREMENTS, USING 5356 FILLER ALLOYS.

10- ALL EXISTING CONCRETE SUBSTRATE SHALL HAVE MINIMUM fc COMPRESSIVE STRENGTH OF 3000 PSI AS VERIFIED BY OTHERS.

11- ALL ALUMINUM EXTRUSIONS IN CONTACT WITH DISSIMILAR MATERIALS SHALL COMPLY WITH SECTION III-6 OF THE 2020 ALUMINUM DESIGN MANUAL.

12- ENGINEER SEAL AFFIXED HERETO VALIDATE STRUCTURAL DESIGN AS SHOWN ONLY. USE OF THIS SPECIFICATION BY CONTRACTOR, et. al. INDEMNIFIES & SAVES HARMLESS THIS ENGINEER FOR ALL COST & DAMAGES INCLUDING LEGAL FEES & APPELLATE FEES RESULTING FROM MATERIAL FABRICATION, SYSTEM ERECTION, CONSTRUCTION PRACTICES BEYOND THAT WHICH IS CALLED FOR BY LOCAL, STATE, & FEDERAL CODES & FROM DEVIATIONS OF THIS PLAN. EXCEPT AS EXPRESSLY PROVIDED HEREIN, NO ADDITIONAL CERTIFICATIONS OR AFFIRMATIONS ARE INTENDED ON THIS DOCUMENT.

13- WATER-TIGHTNESS OF EXISTING HOST SUBSTRATE SHALL BE THE FULL RESPONSIBILITY OF THE INSTALLING CONTRACTOR. CONTRACTOR SHALL ENSURE THAT ANY REMOVED OR ALTERED WATERPROOFING MEMBRANE IS RESTORED AFTER FABRICATION AND INSTALLATION OF STRUCTURE PROPOSED HEREIN. THIS ENGINEER SHALL NOT BE RESPONSIBLE FOR ANY WATERPROOFING OR LEAKAGE ISSUES WHICH WAY OCCUR AS WATER-TIGHTNESS SHALL BE THE FULL RESPONSIBILITY OF THE INSTALLING CONTRACTOR.

THIS DRAWING SHALL ONLY BE USED TO OBTAIN PERMITS IN THE STATE OF FLORIDA

14- (a) THIS P.A.D. (PRODUCT APPROVAL DOCUMENT) PREPARED BY THIS ENGINEER IS GENERIC AND DOES NOT PROVIDE INFORMATION FOR A SITE SPECIFIC PROJECT; i.e. WHERE THE SITE CONDITIONS DEVIATE FROM THE P.A.D.

(b) CONTRACTOR TO BE RESPONSIBLE FOR THE SELECTION, PURCHASE AND INSTALLATION INCLUDING LIFE SAFETY OF THIS PRODUCT, BASED ON THIS P.A.D., PROVIDED HE/SHE DOES NOT DEVIATE FROM THE CONDITIONS DETAILED ON THIS DOCUMENT. CONSTRUCTION SAFETY AT SITE IS THE CONTRACTOR'S RESPONSIBILITY.

(c) THIS P.A.D. WILL BE CONSIDERED INVALID IF ALTERED BY ANY MEANS.

(d) SITE SPECIFIC PROJECTS SHALL BE PREPARED BY A FLORIDA REGISTERED ENGINEER OR ARCHITECT WHICH WILL BECOME THE ENGINEER OF RECORD (E.O.R.) FOR THE PROJECT AND WHO WILL BE RESPONSIBLE FOR THE PROPER USE OF THE P.A.D.

(e) ORIGINAL P.A.D. SHALL BEAR THE DATE AND ORIGINAL SEAL AND SIGNATURE OF THE PROFESSIONAL ENGINEER OF RECORD THAT PREPARED IT.

15- PRODUCT MANUFACTURER'S LABEL SHALL BE PLACED ON AN EXPOSED SURFACE OF STAND, AND SHALL COMPLY WITH SECTION 1703.5 OF THE FLORIDA BUILDING CODE.

INDEX

SHEET #	DESCRIPTION
1	GENERAL NOTES AND INDEX
2	BILL OF MATERIALS AND COMPONENTS: STANDARD & HEAVY SYSTEMS
3	ASSEMBLY DETAILS FOR STANDS: STANDARD & HEAVY SYSTEMS
4	STAND ASSEMBLY DETAILS (CONTINUED): STANDARD & HEAVY SYSTEMS
5	SCHEDULE NOTES/ANCHOR SCHEDULE/REACTION SCHEDULE: STANDARD & HEAVY SYSTEMS
6	EQUIPMENT UNIT TIE DOWN TO RAILS STANDS: STANDARD & HEAVY SYSTEMS
7	SCHEDULE FOR MAX. PRESSURE: STANDARD SYSTEM W/ 5"x5" BASE PLATE
8	SCHEDULE FOR MAX. PRESSURE RATING: STANDARD SYSTEM W/ 6"x6" BASE PLATE
9	SCHEDULE FOR MAX. PRESSURE: HEAVY SYSTEM W/ 5"x5" BASE PLATE
10	SCHEDULE FOR MAX. PRESSURE: HEAVY SYSTEM W/ 6"x6" BASE PLATE

PRODUCT REVISED
as complying with the Florida Building Code
NOA-No. 23-1206.01
Expiration Date 05/15/2029
By _____
Miami-Dade Product Control

FLORIDA BUILDING CODE (High Velocity Hurricane Zone)

ALUMINUM STANDS FOR ROOF TOP EQUIPMENT

F&L ALUMINUM PARTS, INC.
2087 N. POWERLINE RD. SUITE #1
POMPANO BEACH, FL 33069

DRAWN BY: C.R.
DATE 11/15/23
DRAWING No. 23-242
SHEET 1 OF 10

REV. No.	DESCRIPTION	DATE	REV. No.	DESCRIPTION	DATE
1	-	-	3	-	-
2	-	-	4	-	-

TILTECO INC.
TILLIT TESTING & ENGINEERING COMPANY
6355 N.W. 36th. St. Ste. 305, VIRGINA GARDENS, FL 33166
Phone : (305)871-1520 . Fax : (305)871-1531
e-mail: tiltecO@aol.com
CA-0006719
WALTER A. TILLIT Jr. P.E.
FLORIDA Lic. # 44167

P.E. SEAL/SIGNATURE/DATE

WALTER A. TILLIT JR. LICENSE No. 44167 STATE OF FLORIDA PROFESSIONAL ENGINEER

1/29/2023

BILL OF MATERIALS:

COMPONENT No.	DESCRIPTION	DIMENSIONS	MATERIAL	MANUFACTURER	NOTES
1.	RAIL (I–BEAM)	2.50" X 1.375" X 3"	6061–T6 ALLOY	–	SUPPORT FOR ROOF TOP EQUIPMENT FIT AND ADJUSTED INTO 3
2A	LARGE STRUT TUBING	1.75" X 1.75" X 0.093" @STD 2.00" X 2.00" X 0.093" @HVY	6061–T6 ALLOY	–	WIND BRACING COMPONENT WELDED TO 4 & BOLTED TO 2B
2B	SMALL STRUT TUBING	1.50" X 1.50" X 0.125" @STD 1.75" X 1.75" X 0.125" @HVY	6061–T6 ALLOY	–	WIND BRACING COMPONENT WELDED TO 4 & BOLTED TO 2A
3.	TOP CHANNEL	2.00" X 0.563" X 2 ½" L	6061–T6 ALLOY	–	WELDED TO TOP OF 4 TO RECEIVE 1
4.	POST	1.90" O.D X 0.145" @STD 1.90" O.D X 0.200" @HVY	6061–T6 ALLOY	–	WELDED TO 5 , 2A , 2B & 3
5.	BASE PLATE	5" X 5" X 1/4" OR 6" X 6" X 1/4"	6061–T6 ALLOY	–	WELDED TO 4 & ANCHORED TO EXISTING STRUCTURE (SEE SHEET 5 FOR SPECS.)

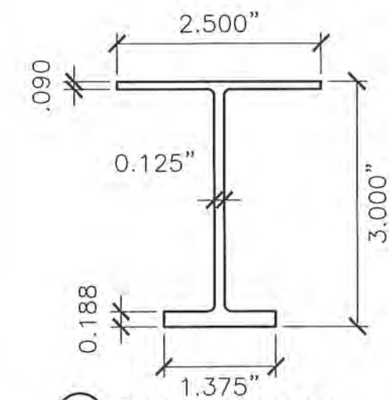

1 RAIL (I-BEAM)

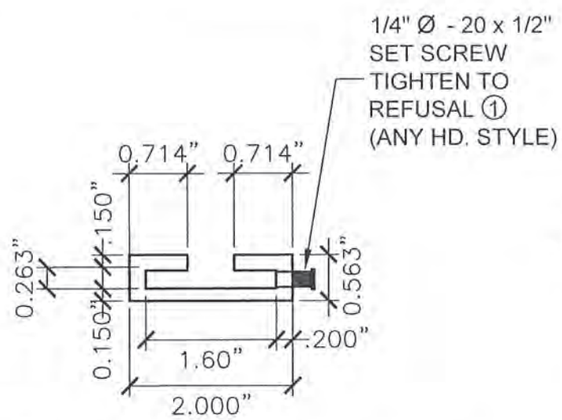

3 TOP CHANNEL (2.50" LONG)

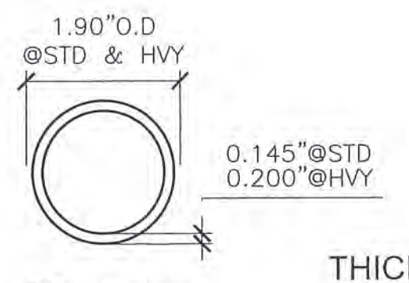

4 POSTS

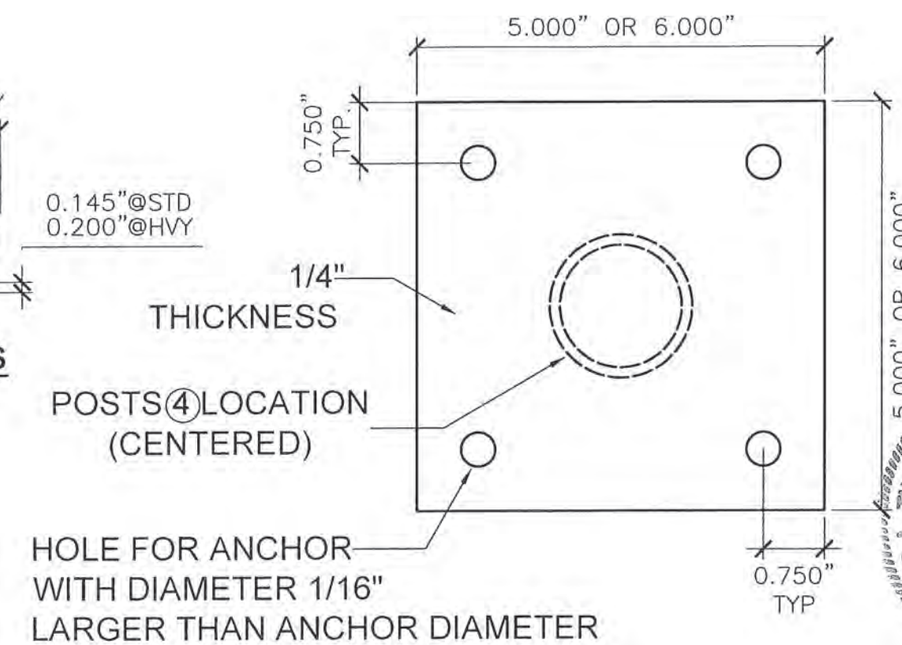

5 BASE PLATE: VALID FOR STD & HVY SYSTEMS

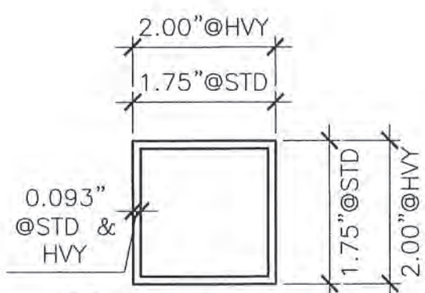

2A LARGE STRUT TUBING

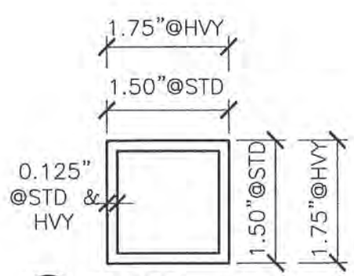

2B SMALL STRUT TUBING

COMPONENTS

ESC: N.T.S.

FLORIDA BUILDING CODE (High Velocity Hurricane Zone)

ALUMINUM STANDS FOR ROOF TOP EQUIPMENT

F&L ALUMINUM PARTS, INC.

2087 N. POWERLINE RD. SUITE #1
POMPANO BEACH, FL 33069

DRAWN BY: C.R.
DATE: 11/15/23
23–242 DRAWING No
SHEET 2 OF 10

REV. No	DESCRIPTION	DATE	REV. No	DESCRIPTION	DATE
1	-	-	3	-	-
2	-	-	4	-	-

TILTECO INC.
TILLIT TESTING & ENGINEERING COMPANY
6355 N.W. 36th St. Ste. 305 VIRGINIA GARDENS, FL 33166
Phone : (305)871-1530 , Fax : (305)871-1531
e-mail: tilteco@aol.com
CA-0006719
WALTER A. TILLIT Jr. P.E.
FLORIDA Lic. # 44167

WALTER A. TILLIT JR. LICENSE No. 44167 STATE OF FLORIDA PROFESSIONAL ENGINEER

P.E. SEAL/SIGNATURE/DATE

PRODUCT REVISED
as complying with the Florida Building Code
NOA-No. 23-1206.01
Expiration Date 05/15/2029
By
Miami-Dade Product Control

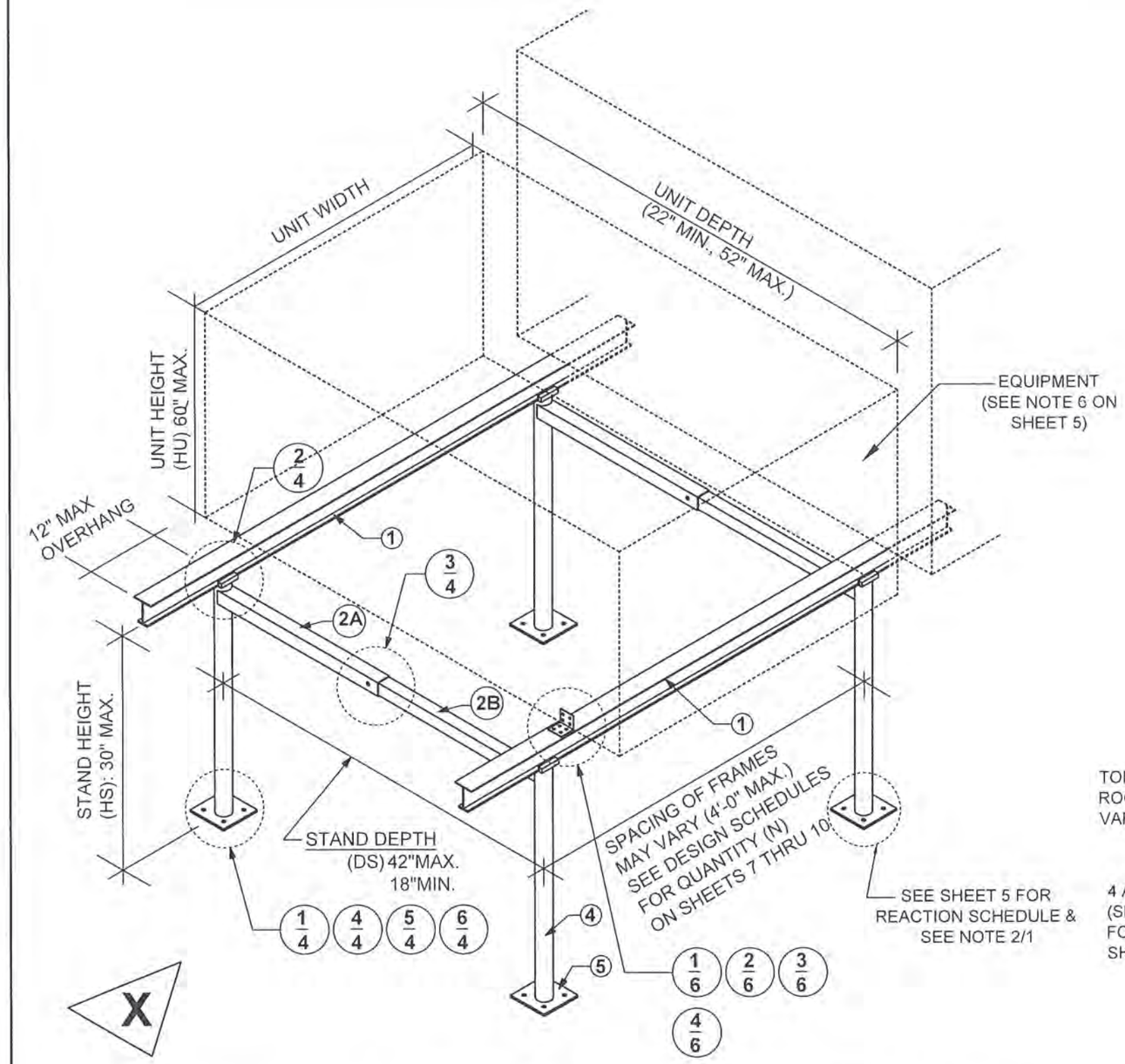

ASSEMBLY FOR STANDS (STANDARD & HEAVY SYSTEMS

SCALE: N.T.S

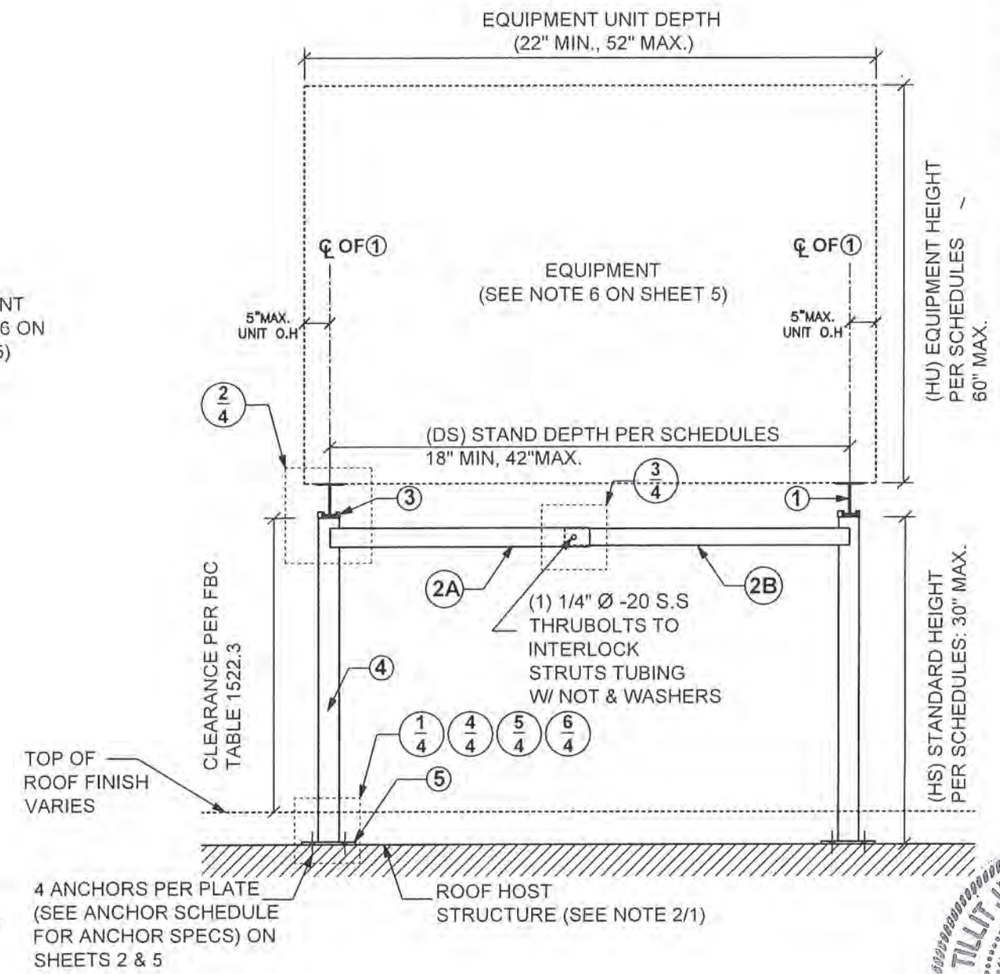

ELEVATION X

SCALE: 1/16"= 0'-1"

FLORIDA BUILDING CODE (High Velocity Hurricane Zone)

ALUMINUM STANDS FOR ROOF TOP EQUIPMENT

F&L ALUMINUM PARTS, INC.

2087 N. POWERLINE RD. SUITE #1
POMPANO BEACH, FL 33069

DRAWN BY: C.R.
DATE: 11/15/23
DRAWING No: 23-242
SHEET 3 OF 10

REV. No	DESCRIPTION	DATE	REV. No	DESCRIPTION	DATE
1	-	-	3	-	-
2	-	-	4	-	-

TILTECO INC.
TILLIT TESTING & ENGINEERING COMPANY
6355 N.W. 36th. St., Ste. 305, VIRGINIA GARDENS, FL 33166
Phone : (305)871-1530 . Fax : (305)871-1531
e-mail: tilteco@aol.com
CA-0006719
WALTER A. TILLIT Jr. P.E.
FLORIDA Lic. # 44167

WALTER A. TILLIT JR. LICENSE No. 44167 STATE OF FLORIDA PROFESSIONAL ENGINEER

P.E. SEAL/SIGNATURE/DATE

PRODUCT REVISED
as complying with the Florida Building Code
NOA-No. 23-1206.01

Expiration Date 05/15/2029

By _____
Miami-Dade Product Control

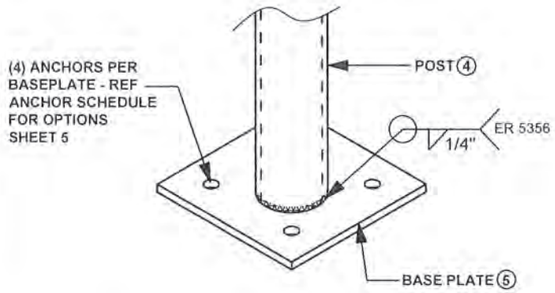

1 POST & BASEPLATE: STANDARD & HEAVY SYSTEMS

SCALE: N.T.S

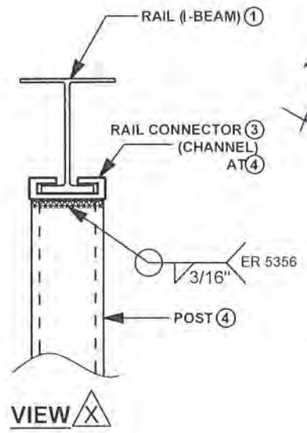

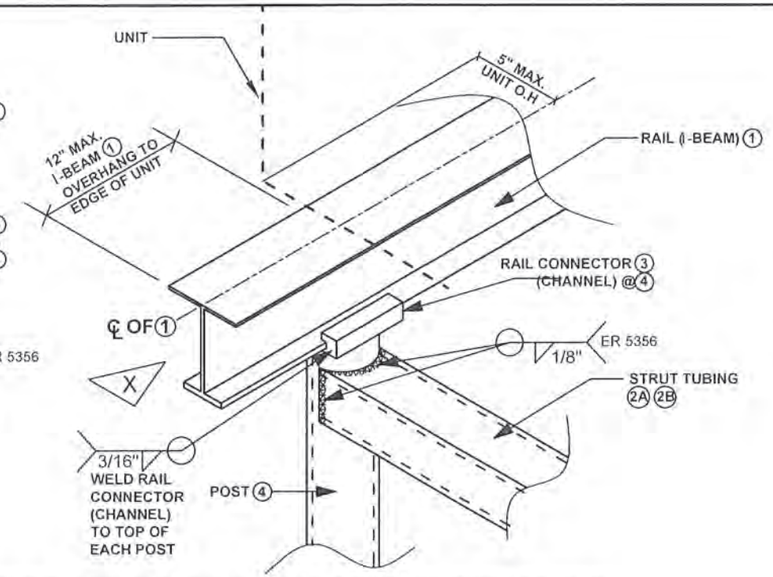

2 POST, STRUT TUBING & TOP CHANNEL CONNECTION: STANDARD & HEAVY SYSTEMS

SCALE: N.T.S

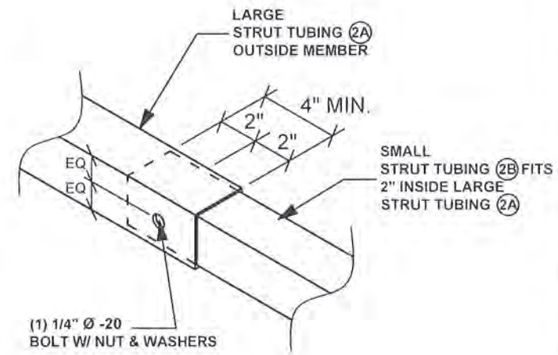

3 STRUT SPLICE: STANDARD & HEAVY SYSTEMS

SCALE: N.T.S

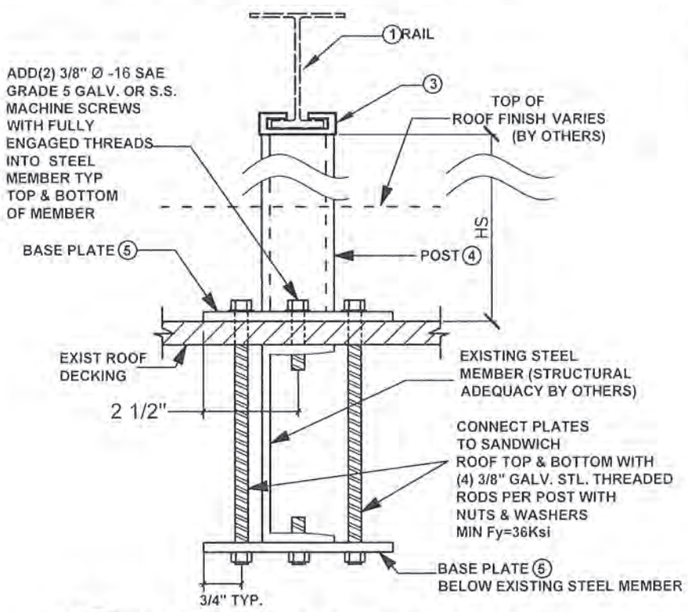

4 BASE PLATE ATTACHMENT TO EXISTING STEEL TRUSS OR STEEL BEAM ROOF

SCALE: N.T.S

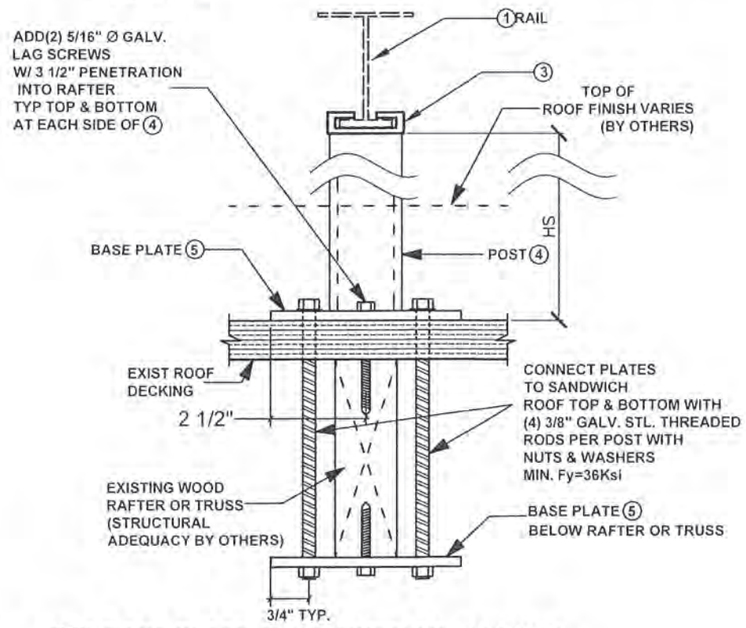

5 BASE PLATE ATTACHMEN TO EXISTING WOOD TRUSS OR WOOD RAFTER ROOF

SCALE: N.T.S

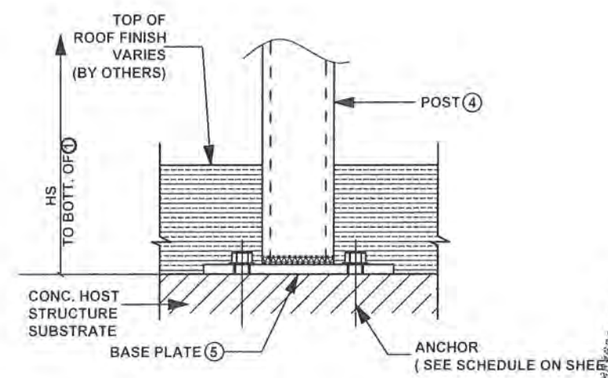

6 BASE PLATE ATTACHMENT TO EXIST CONCRETE STRUCTURAL SLAB

SCALE: N.T.S

TYPICAL ASSEMBLY AND POST ATTACHMENT DETAILS FOR STANDS AT STANDARD & HEAVY SYSTEMS

FLORIDA BUILDING CODE (High Velocity Hurricane Zone)

ALUMINUM STANDS FOR ROOF TOP EQUIPMENT

F&L ALUMINUM PARTS, INC.
2087 N. POWERLINE RD. SUITE #1
POMPANO BEACH, FL. 33069

DRAWN BY: C.R.
DATE: 11/15/23
DRAWING No: 23-242
SHEET 4 OF 10

REV. No	DESCRIPTION	DATE	REV. No	DESCRIPTION	DATE
1	-	-	3	-	-
2	-	-	4	-	-

TILTECO INC.
TILLIT TESTING & ENGINEERING COMPANY
8355 N.W. 36th. St. Ste. 305, VIRGINIA GARDENS, FL 33166
Phone : (305)871-1530 . Fax : (305)871-1531
e-mail: tilteco@aol.com
CA-0006719
WALTER A. TILLIT Jr. P.E.
FLORIDA Lic. # 44167

P.E. SEAL/SIGNATURE/DATE

WALTER A. TILLIT JR. LICENSE No. 44167 STATE OF FLORIDA PROFESSIONAL ENGINEER

PRODUCT REVISED
as complying with the Florida Building Code
NOA-No. 23-1206.01
Expiration Date 05/15/2029
By
Miami-Dade Product Control

NOTES APPLICABLE TO SCHEDULES ON SHEETS 7 THRU 10

1. SCHEDULES ON SHEETS 7 THRU 10 PROVIDE MAXIMUM A.S.D LATERAL & UPLIFT WIND LOADS FOR EACH COMBINATION OF TOTAL UNIT FRONTAL AREA (AF), STAND DEPTH (DS), EQUIPMENT HEIGHT(HU), STAND HEIGHT (HS) AND NUMBER OF POST FRAMES (N) PER STAND, FOR STANDARD AND HEAVY SYSTEMS.

2. TOTAL FRONTAL AREA IS TOTAL AREA OF EQUIPMENT UNIT FACE PARALLEL TO RAIL① (EQUAL TO TOTAL SUM OF UNIT HEIGHT (IN) x UNIT WIDTH (IN) FOR ALL UNITS ON STAND), AS DEPICTED HEREIN.

3. UNIT HEIGHT (HU) INCHES INCLUDED IN SCHEDULE SHALL BE DEFINED AS FOLLOWS: AVERAGE HEIGHT OF ALL UNITS IF THE DIFFERENCE IN HEIGHT BETWEEN TWO ADJACENT UNITS DOES NOT EXCEED 8", OR MAX UNIT HEIGHT OF INSTALLATION IF THE ABOVE CONDITION IS NOT COMPLIED WITH. MAX. UNIT HEIGHT IS 60" .

4. STAND HEIGHT (HS), INCHES, IS AS DEPICTED HEREIN, MEASURE FROM HOST STRUCTURE TO BOTTOM OF RAIL①, VALID FOR STANDARD AMD HEAVY SYSTEMS.

5. "FRAMES" HERE DENOTES ASSEMBLAGE OF 2 POSTS ④ WITH STRUTS (2A), (2B). PERPENDICULAR TO RAILS①, VALID FOR STANDARD AND HEAVY SYSTEMS.

6. EACH EQUIPMENT UNIT SHALL HAVE A MAXIMUM WEIGHT OF 500 lbs & A MIN.WEIGHT OF 75 LBS. SEE GENERAL NOTE 5 ON SHEET 1

7. SPACING OR CLEARANCE BETWEEN UNITS MAY VARY, BASED ON UNITS MANUFACTURER SPECS.

8. REFERENCE ANCHOR SCHEDULE BELOW FOR ALLOWABLE ANCHORS AND INSTALLATION CRITERIA, BASED ON SUBSTRATE AT ROOF.

9. EQUIPMENT UNITS SHALL BE ATTACHED TO RAILS ① PER UNIT CONNECTION DETAILS ON SHEET 6. AND AS PER ACCOMPANYING NOTES BASED ON MANUFACTURER'S SPECS.

ANCHORS SCHEDULE

SUBSTRATE											
CONCRETE △				STEEL △				WOOD △			
MANUFACTURER	DIAMETER	MIN. E.D	MIN. EMBD'T	MANUFACTURER	DIAMETER	MIN. E.D	MIN. EMBD'T	MANUFACTURER	DIAMETER	MIN. E.D	MIN. EMBD'T
DEWALT	3/8"	5"	2 1/2"	DEWALT	5/16"-24	5/8"	FULL THREAD ENGAGEMENT	N/A	3/8"	1 1/2"	3 1/2"
SCREW BOLT OR POWER BOLT				HEX WASHER HEAD DRILL FLEX STRUCTURAL DRILL SCREWS				NDS LAG SCREWS			
ELCO	3/8"	5"	2 1/2"								
CONFLEX											

△ NOTES: 1 - CONCRETE TO BE MIN f'c = 3 KSI
2 - STEEL TO BE MIN ASTM A-36, 1/4" MIN THICK.
3 - WOOD TO BE G=0.55 SOUTHERN YELLOW PINE # 2, MINIMUM 4" THICK.

**REACTION SCHEDULE: SEE NOTE 2/1

REACTION AT BASE Rx	REACTION AT BASE Ry	REACTION AT BASE M.base
230 LB	520 LB	3.4 K-IN

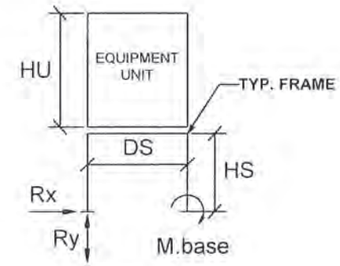

SIDE VIEW

** REACTIONS CORRESPOND TO THE WORST CASE FORCE APPLIED AT BASE PLATE FOR ANY COMBINATION OF DS, HU AND HS DIMENSIONS FOR STANDARD & HEAVY SYSTEMS

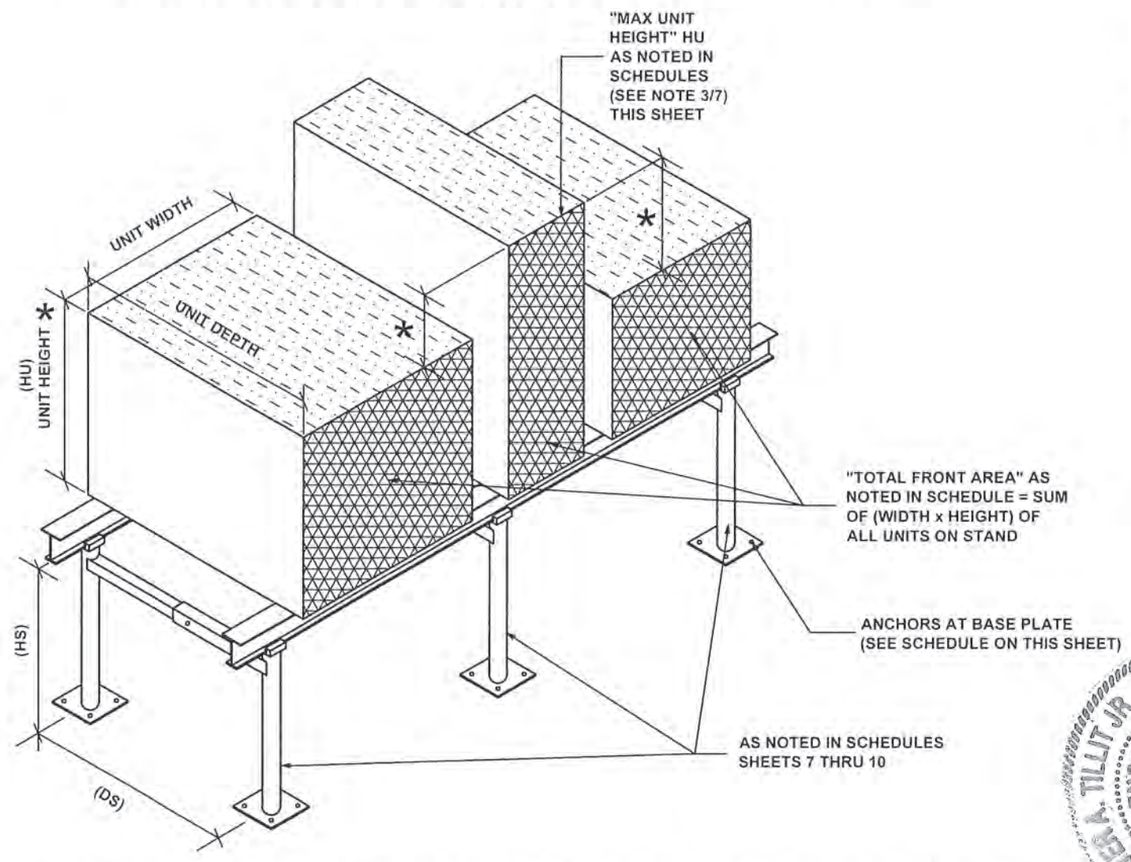

UNIT SIZES & CONFIGURATION (FOR USE WITH DESIGN SCHEDULES)

SCALE: 1/4" = 1'-0" ISOMETRIC

* SEE NOTE 3 THIS SHEET

FLORIDA BUILDING CODE (High Velocity Hurricane Zone)

ALUMINUM STANDS FOR ROOF TOP EQUIPMENT

F&L ALUMINUM PARTS, INC.
2087 N. POWERLINE RD. SUITE #1
POMPANO BEACH, FL 33069

DRAWN BY: C.R.
DATE 11/15/23
23-242 DRAWING No
SHEET 5 OF 10

REV. No	DESCRIPTION	DATE	REV. No	DESCRIPTION	DATE
1	-	-	3	-	-
2	-	-	4	-	-

TILTECO INC.
TILLIT TESTING & ENGINEERING COMPANY
6335 N.W. 36th. St., Ste. 305, VIRGINIA GARDENS, FL 33166
Phone : (305)871-1530 . Fax : (305)871-1531
e-mail: tilteco@aol.com
CA-0006719
WALTER A. TILLIT Jr. P.E.
FLORIDA Lic. # 44167

WALTER A. TILLIT JR. LICENSE No. 44167 STATE OF FLORIDA PROFESSIONAL ENGINEER

12/9/2023
P.E. SEAL/SIGNATURE/DATE

PRODUCT REVISED
as complying with the Florida Building Code
NOA-No. 23-1206.01
Expiration Date 05/15/2029
By
Miami-Dade Product Control

GENERIC * EQUIPMENT UNIT ANCHORAGE TO RAIL ①:
*SEE NOTES BELOW FOR ADDITIONAL GUIDELINES FOR TIE DOWN OF EQUIPMENT TO STANDS:
VALID FOR STANDARD & HEAVY SYSTEMS

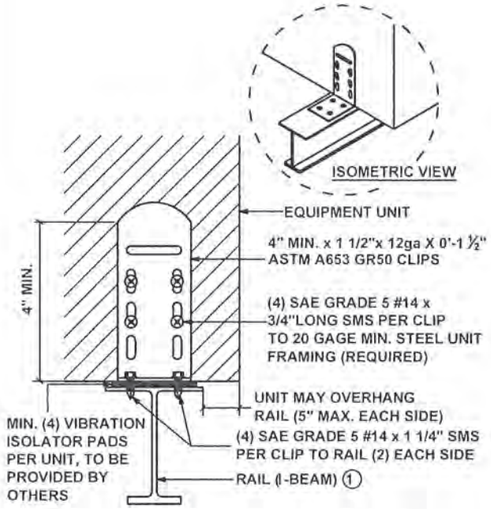

TYPICAL CONNECTION:
-MINIMUM (4) PER UNIT-

① **CLIPPED UNIT CONNECTION**
SCALE: N.T.S ELEVATION

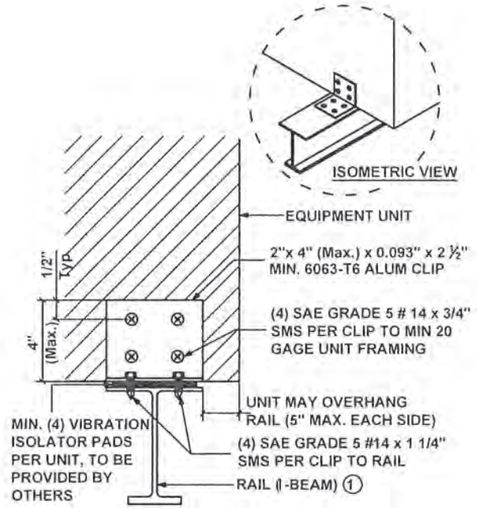

TYPICAL CONNECTION:
-MINIMUM (4) PER UNIT-

② **CLIPPED UNIT CONNECTION**
SCALE: N.T.S ELEVATION

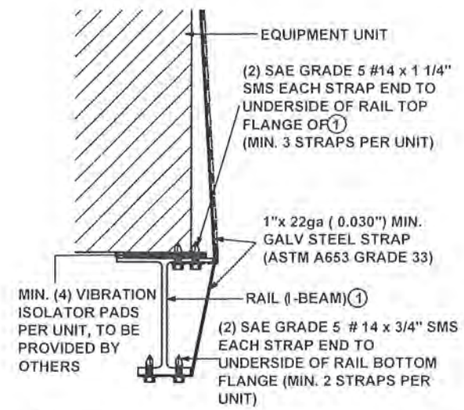

TYPICAL CONNECTION:
-MINIMUM (4) PER UNIT-

③ **STRAPPED UNIT CONNECTION**
SCALE: N.T.S ELEVATION

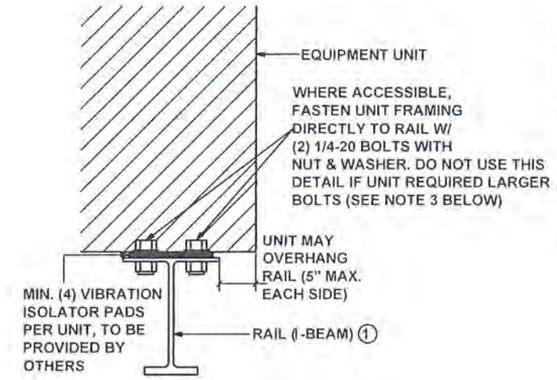

TYPICAL CONNECTION:
-MINIMUM (4) PER UNIT-

④ **DIRECT UNIT CONNECTION**
SCALE: N.T.S ELEVATION

* ADDITIONAL NOTES WITH GUIDELINES AND REFERENCES FOR PERFORMING UNIT'S TIE DOWN TO STANDS:

(1) IF EQUIPMENT TO BE INSTALLED IS MANUFACTURED BY CARRIER, USE THEIR TECHNICAL EVALUATION REPORT, AS ENGINEERED FOR TIE DOWN PROCEDURES.
(2) IF EQUIPMENT TO BE INSTALLED IS MANUFACTURED BY RHEEM, USE THEIR NOA FOR TIE DOWN PROCEDURES.
(3) FOR UNITS REQUIRED TIE DOWN BOLTS LARGER THAN 1/4 Ø, RAIL ① SHALL NOT BE USED. SPECIAL ENGINEERING WILL BE APPLICABLE IN THAT CASE.
(4) ANY OTHER CASE OF TIE DOWN NOT ADDRESSED HERE SHALL BE MADE THRU SPECIAL ENGINEERING.

FLORIDA BUILDING CODE (High Velocity Hurricane Zone)

ALUMINUM STANDS FOR ROOF TOP EQUIPMENT

F&L ALUMINUM PARTS, INC.
2087 N. POWERLINE RD. SUITE #1
POMPANO BEACH, FL. 33069

REV. No	DESCRIPTION	DATE	REV. No	DESCRIPTION	DATE
1	-	-	3	-	-
2	-	-	4	-	-

DRAWN BY: C.R.
DATE 11/15/23
23-242 DRAWING No
SHEET 6 OF 10

TILTECO INC.
TILLIT TESTING & ENGINEERING COMPANY
6355 N.W. 36th. St. Ste. 305, VIRGINIA GARDENS, FL 33166
Phone : (305)871-1530 . Fax : (305)871-1531
e-mail: tilteco@aol.com
CA-0006719
WALTER A. TILLIT Jr. P.E.
FLORIDA Lic. # 44167

P.E. SEAL/SIGNATURE/DATE

WALTER A. TILLIT JR. LICENSE No. 44167 STATE OF FLORIDA PROFESSIONAL ENGINEER

PRODUCT REVISED
as complying with the Florida Building Code
NOA-No. 23-1206.01
Expiration Date 05/15/2029
By
Miami-Dade Product Control

STANDARD SYSTEM

ASD DESIGN LATERAL (WL) & UPLIFT (WU) PRESSURE RATING (psf) SCHEDULE GIVEN A STAND WITH STAND'S DEPTH (DS), TOTAL EQUIPMENT UNIT FRONT AREA (AF), EQUIPMENT UNIT HEIGHT (HU), STAND HEIGHT (HS) AND NUMBER OF REQUIRED FRAMES (N) W/ 5" X 5" BASE PLATE AT POSTS

DS ≥18" MAX UP TO 42"

AF MAX (IN^2)	HU MAX (IN)	HS MAX (IN)	N = 2		N = 3		N = 4		N = 5		N = 6		N = 7		N = 8		N = 9		N = 10	
			WL	WU	WL	WU	WL	WU	WL	WU	WL	WU	WL	WU	WL	WU	WL	WU	WL	WU
576	24	18	250	197	250	197	250	197	250	197	250	197	250	197	250	197	250	197	250	197
		24	250	197	250	197	250	197	250	197	250	197	250	197	250	197	250	197	250	197
		30	215	170	250	197	250	197	250	197	250	197	250	197	250	197	250	197	250	197
864	28	18	188	148	210	166	250	197	250	197	250	197	250	197	250	197	250	197	250	197
		24	185	146	210	166	250	197	250	197	250	197	250	197	250	197	250	197	250	197
		30	143	113	210	166	250	197	250	197	250	197	250	197	250	197	250	197	250	197
1152	32	18	147	116	169	133	241	191	250	197	250	197	250	197	250	197	250	197	250	197
		24	134	106	169	133	241	191	250	197	250	197	250	197	250	197	250	197	250	197
		30	107	85	161	127	225	170	250	197	250	197	250	197	250	197	250	197	250	197
1440	36	18	120	95	142	112	201	159	250	197	250	197	250	197	250	197	250	197	250	197
		24	107	85	142	112	201	159	250	197	250	197	250	197	250	197	250	197	250	197
		30	86	68	129	102	172	136	215	170	250	197	250	197	250	197	250	197	250	197
1728	36	18	100	79	119	94	169	133	218	172	250	197	250	197	250	197	250	197	250	197
		24	90	71	119	94	169	133	218	172	250	197	250	197	250	197	250	197	250	197
		30	72	57	107	85	143	114	179	141	220	170	250	197	250	197	250	197	250	197
2304	36	18	75	59	91	72	128	101	165	130	201	159	238	188	250	197	250	197	250	197
		24	67	53	91	72	128	101	165	130	201	159	235	186	250	197	250	197	250	197
		30			81	64	107	85	134	106	161	127	188	148	215	170	242	191	250	197
2880	36	18			74	58	103	82	133	105	162	128	191	152	221	174	250	197	250	197
		24			74	58	103	82	133	105	161	127	188	148	215	170	242	191	250	197
		30			64	51	86	68	107	85	129	102	150	119	172	136	193	153	215	170
3600	42	18					86	68	110	87	133	105	157	124	181	143	204	160	228	180
		24					86	68	107	85	129	102	150	119	172	136	193	153	215	170
		30					69	54	86	68	103	81	120	95	138	109	155	122	172	136
4320	48	18					72	57	92	73	111	88	131	103	150	119	170	134	189	149
		24					72	57	90	71	107	85	126	99	143	113	162	127	179	141
		30							72	57	86	68	100	79	115	90	129	102	143	113
5760	48	18							70	55	85	67	99	78	114	90	128	101	143	113
		24							67	53	81	64	94	74	107	85	121	95	134	106
		30									64	51	75	59	86	68	97	76	107	85
7200	60	18											76	60	87	69	98	78	109	86
		24											75	59	86	68	97	76	107	85
		30													69	54	77	61	86	68

FLORIDA BUILDING CODE (High Velocity Hurricane Zone)

ALUMINUM STANDS FOR ROOF TOP EQUIPMENT

F&L ALUMINUM PARTS, INC.
2087 N. POWERLINE RD. SUITE #1
POMPANO BEACH, FL 33069

DRAWN BY: C.R.
DATE 11/15/23
23-242 DRAWING No
SHEET 7 OF 10

REV. No	DESCRIPTION	DATE	REV. No	DESCRIPTION	DATE
1	-	-	3	-	-
2	-	-	4	-	-

TILTECO INC.
TILLIT TESTING & ENGINEERING COMPANY
6355 N.W. 36th. St., Ste. 305, VIRGINIA GARDENS, FL 33166
Phone : (305)871-1530 . Fax : (305)871-1531
e-mail: tilteco@aol.com
CA-0006719
WALTER A. TILLIT Jr. P.E.
FLORIDA Lic. # 44167

P.E. SEAL/SIGNATURE/DATE

12/9/2023

WALTER A. TILLIT JR. LICENSE No. 44167 STATE OF FLORIDA PROFESSIONAL ENGINEER

PRODUCT REVISED
as complying with the Florida Building Code
NOA-No. 23-1206.01

Expiration Date 05/15/2029

By
Miami-Dade Product Control

STANDARD SYSTEM

ASD DESIGN LATERAL (WL) & UPLIFT (WU) PRESSURE RATING (psf) SCHEDULE GIVEN A STAND WITH STAND'S DEPTH (DS), TOTAL EQUIPMENT UNIT FRONT AREA (AF), EQUIPMENT UNIT HEIGHT (HU), STAND HEIGHT (HS) AND NUMBER OF REQUIRED FRAMES (N) W/ 6" X 6" BASE PLATE AT POSTS

DS ≥18"
MAX
UP TO 42"

AF MAX (IN^2)	HU MAX (IN)	HS MAX (IN)	N = 2		N = 3		N = 4		N = 5		N = 6		N = 7		N = 8		N = 9		N = 10	
			WL	WU	WL	WU	WL	WU	WL	WU	WL	WU	WL	WU	WL	WU	WL	WU	WL	WU
576	24	18	250	197	250	197	250	197	250	197	250	197	250	197	250	197	250	197	250	197
		24	250	197	250	197	250	197	250	197	250	197	250	197	250	197	250	197	250	197
		24	215	170	250	197	250	197	250	197	250	197	250	197	250	197	250	197	250	197
864	28	18	188	148	210	166	250	197	250	197	250	197	250	197	250	197	250	197	250	197
		24	179	141	210	166	250	197	250	197	250	197	250	197	250	197	250	197	250	197
		30	143	113	210	166	250	197	250	197	250	197	250	197	250	197	250	197	250	197
1152	32	18	147	116	169	133	241	191	250	197	250	197	250	197	250	197	250	197	250	197
		24	134	106	169	133	241	191	250	197	250	197	250	197	250	197	250	197	250	197
		30	107	85	161	127	215	170	250	197	250	197	250	197	250	197	250	197	250	197
1440	36	18	120	94	142	112	201	159	250	197	250	197	250	197	250	197	250	197	250	197
		24	107	85	142	112	201	159	250	197	250	197	250	197	250	197	250	197	250	197
		30	86	68	129	102	172	136	215	170	250	197	250	197	250	197	250	197	250	197
1728	36	18	100	79	119	94	169	133	218	172	250	197	250	197	250	197	250	197	250	197
		24	90	70	119	94	169	133	218	172	250	197	250	197	250	197	250	197	250	197
		30	72	57	107	85	143	113	179	141	215	170	250	197	250	197	250	197	250	197
2304	36	18	75	59	91	72	128	101	165	130	201	159	238	188	250	197	250	197	250	197
		24	67	53	91	72	128	101	165	130	201	159	238	188	250	197	250	197	250	197
		30			81	64	107	85	134	106	161	127	188	148	215	170	250	197	250	197
2880	36	18			74	58	103	82	133	105	194	154	191	151	221	174	250	197	250	197
		24			74	58	105	82	133	105	161	127	188	148	215	170	242	191	250	197
		30			64	51	86	68	107	85	129	102	150	119	172	136	193	153	215	170
3600	42	18					86	68	110	87	133	105	157	124	181	143	204	161	228	180
		24					86	68	107	85	129	102	150	119	172	136	193	153	215	170
		30					69	54	86	68	103	81	120	95	138	109	155	122	172	136
4320	48	18					72	57	92	73	111	88	131	103	150	119	170	134	189	149
		24					72	56	90	71	107	85	126	99	143	113	161	127	179	141
		30							72	57	86	68	100	79	115	90	129	102	143	113
5760	48	18							70	55	85	67	99	78	114	90	128	101	143	113
		24							67	53	81	64	94	74	107	85	121	95	134	106
		30									64	51	75	59	86	68	97	76	107	85
7200	60	18											76	60	87	69	98	78	109	86
		24											75	59	86	68	97	76	107	85
		30													69	54	77	61	86	68

FLORIDA BUILDING CODE (High Velocity Hurricane Zone)

ALUMINUM STANDS FOR ROOF TOP EQUIPMENT

F&L ALUMINUM PARTS, INC.
2087 N. POWERLINE RD. SUITE #1
POMPANO BEACH, FL. 33069

DRAWN BY: C.R.
11/15/23
DATE
23-242
DRAWING No
SHEET 8 OF 10

REV. No	DESCRIPTION	DATE	REV. No	DESCRIPTION	DATE
1	-	-	3	-	-
2	-	-	4	-	-

TILTECO INC.
TILLIT TESTING & ENGINEERING COMPANY
6355 N.W. 36th St. Ste. 305, VIRGINIA GARDENS, FL 33166
Phone : (305)871-1530 . Fax : (305)871-1531
e-mail: tilteco@aol.com
CA-0006719
WALTER A. TILLIT Jr. P.E.
FLORIDA Lic. # 44167

P.E. SEAL/SIGNATURE/DATE

WALTER A. TILLIT JR. LICENSE No. 44167 STATE OF FLORIDA PROFESSIONAL ENGINEER

PRODUCT REVISED
as complying with the Florida Building Code
NOA-No. 23-1206.01
Expiration Date 05/15/2029
By
Miami-Dade Product Control

HEAVY SYSTEM

ASD DESIGN LATERAL (WL) & UPLIFT (WU) PRESSURE RATING (psf) SCHEDULE GIVEN A STAND WITH STAND'S DEPTH (DS), TOTAL EQUIPMENT UNIT FRONT AREA (AF), EQUIPMENT UNIT HEIGHT (HU), STAND HEIGHT (HS) AND NUMBER OF REQUIRED FRAMES (N) W/ 5" X 5" BASE PLATE AT POSTS

DS ≥18"
MAX
UP TO 42"

AF MAX (IN^2)	HU MAX (IN)	HS MAX (IN)	N = 2		N = 3		N = 4		N = 5		N = 6		N = 7		N = 8		N = 9		N = 10	
			WL	WU	WL	WU	WL	WU	WL	WU	WL	WU	WL	WU	WL	WU	WL	WU	WL	WU
576	24	18	250	197	250	197	250	197	250	197	250	197	250	197	250	197	250	197	250	197
		24	250	197	250	197	250	197	250	197	250	197	250	197	250	197	250	197	250	197
		30	230	182	250	197	250	197	250	197	250	197	250	197	250	197	250	197	250	197
864	28	18	227	179	250	197	250	197	250	197	250	197	250	197	250	197	250	197	250	197
		24	185	146	250	197	250	197	250	197	250	197	250	197	250	197	250	197	250	197
		30	156	123	218	172	250	197	250	197	250	197	250	197	250	197	250	197	250	197
1152	32	18	173	136	233	184	250	197	250	197	250	197	250	197	250	197	250	197	250	197
		24	141	111	195	154	250	197	250	197	250	197	250	197	250	197	250	197	250	197
		30	118	93	166	131	250	178	250	197	250	197	250	197	250	197	250	197	250	197
1440	36	18	139	110	193	152	250	197	250	197	250	197	250	197	250	197	250	197	250	197
		24	113	89	159	125	215	170	250	197	250	197	250	197	250	197	250	197	250	197
		30	95	75	135	106	182	144	230	181	250	197	250	197	250	197	250	197	250	197
1728	36	18	116	92	157	124	219	173	250	197	250	197	250	197	250	197	250	197	250	197
		24	94	74	132	105	180	142	227	179	250	197	250	197	250	197	250	197	250	197
		30	79	62	113	89	152	120	192	151	231	182	250	197	250	197	250	197	250	197
2304	36	18	87	69	119	94	165	130	209	165	250	197	250	197	250	197	250	197	250	197
		24	70	56	100	79	135	107	170	135	250	162	241	190	250	197	250	197	250	197
		30			85	67	114	90	144	114	174	137	203	160	232	184	250	197	250	197
2880	36	18	70	55	97	76	132	105	167	132	202	159	236	187	250	197	250	197	250	197
		24			80	63	108	86	137	108	165	130	193	152	221	174	249	196	250	197
		30			68	53	92	73	115	91	139	110	163	128	186	147	210	166	233	184
3600	42	18			79	62	107	85	135	107	163	129	191	150	218	172	246	194	250	197
		24			65	51	88	70	110	87	133	105	155	122	178	140	200	158	222	176
		30					74	59	93	73	112	88	131	103	150	118	169	133	187	148
4320	48	18					90	71	113	89	136	107	159	125	182	144	205	162	228	180
		24					73	58	92	73	111	87	129	102	148	117	167	132	185	146
		30							78	61	93	74	109	86	125	98	140	111	156	123
5760	48	18							85	67	102	81	119	94	137	108	154	122	171	135
		24							69	55	83	66	97	77	111	88	125	99	139	110
		30									70	55	82	65	94	74	106	83	117	93
7200	60	18									81	64	94	75	108	85	122	96	135	107
		24									66	52	77	61	90	71	99	78	110	87
		30											65	51	75	60	84	66	93	73

FLORIDA BUILDING CODE (High Velocity Hurricane Zone)

ALUMINUM STANDS FOR ROOF TOP EQUIPMENT

F&L ALUMINUM PARTS, INC.
2087 N. POWERLINE RD. SUITE #1
POMPANO BEACH, FL. 33069

DRAWN BY: C.R.
DATE 11/15/23
23-242 DRAWING No
SHEET 9 OF 10

REV. No	DESCRIPTION	DATE	REV. No	DESCRIPTION	DATE
1	-	-	3	-	-
2	-	-	4	-	-

TILTECO INC.
TILLIT TESTING & ENGINEERING COMPANY
6355 N.W. 36th. St. Ste. 305 VIRGINIA GARDENS, FL. 33166
Phone : (305)871-1530 . Fax : (305)871-1531
e-mail: tilteco@aol.com
CA-0006719
WALTER A. TILLIT Jr. P.E.
FLORIDA Lic. # 44167

P.E. SEAL/SIGNATURE/DATE

WALTER A. TILLIT JR. LICENSE No. 44167 STATE OF FLORIDA PROFESSIONAL ENGINEER

PRODUCT REVISED
as complying with the Florida Building Code
NOA-No. 23-1206.01
Expiration Date 05/15/2029
By
Miami-Dade Product Control

HEAVY SYSTEM

ASD DESIGN LATERAL (WL) & UPLIFT (WU) PRESSURE RATING (psf) SCHEDULE GIVEN A STAND WITH STAND'S DEPTH (DS), TOTAL EQUIPMENT UNIT FRONT AREA (AF), EQUIPMENT UNIT HEIGHT (HU), STAND HEIGHT (HS) AND NUMBER OF REQUIRED FRAMES (N) W/ 6" X 6" BASE PLATE AT POSTS

DS ≥18" MAX UP TO 42"

AF MAX (IN^2)	HU MAX (IN)	HS MAX (IN)	N = 2		N = 3		N = 4		N = 5		N = 6		N = 7		N = 8		N = 9		N = 10	
			WL	WU	WL	WU	WL	WU	WL	WU	WL	WU	WL	WU	WL	WU	WL	WU	WL	WU
576	24	18	250	197	250	197	250	197	250	197	250	197	250	197	250	197	250	197	250	197
		24	250	197	250	197	250	197	250	197	250	197	250	197	250	197	250	197	250	197
		30	227	179	250	197	250	197	250	197	250	197	250	197	250	197	250	197	250	197
864	28	18	219	173	250	197	250	197	250	197	250	197	250	197	250	197	250	197	250	197
		24	181	143	246	194	250	197	250	197	250	197	250	197	250	197	250	197	250	197
		30	154	121	212	168	250	197	250	197	250	197	250	197	250	197	250	197	250	197
1152	32	18	167	132	223	176	250	197	250	197	250	197	250	197	250	197	250	197	250	197
		24	137	108	189	149	250	197	250	197	250	197	250	197	250	197	250	197	250	197
		30	117	92	163	128	221	175	250	197	250	197	250	197	250	197	250	197	250	197
1440	36	18	135	106	184	143	250	197	250	197	250	197	250	197	250	197	250	197	250	197
		24	111	87	154	122	210	165	250	197	250	197	250	197	250	197	250	197	250	197
		30	94	74	132	104	179	141	226	178	250	197	250	197	250	197	250	197	250	197
1728	36	18	112	89	154	122	211	166	250	197	250	197	250	197	250	197	250	197	250	197
		24	92	73	129	102	175	138	221	174	250	197	250	197	250	197	250	197	250	197
		30	78	62	110	87	150	118	189	149	227	180	250	197	250	197	250	197	250	197
2304	36	18	84	66	116	92	159	125	201	158	250	192	250	197	250	197	250	197	250	197
		24	69	55	97	77	132	104	167	132	201	158	235	185	250	197	250	197	250	197
		30			83	66	113	89	142	112	171	135	200	158	229	181	250	197	250	197
2880	36	18	67	53	93	74	127	101	161	127	194	154	228	180	250	197	250	197	250	197
		24			78	62	106	83	133	105	161	127	188	149	216	170	243	192	250	197
		30			67	53	90	71	114	90	137	108	160	127	184	150	207	163	230	182
3600	42	18			76	60	103	81	131	103	157	124	184	145	211	166	238	188	250	197
		24					86	68	108	85	130	102	152	120	174	137	196	154	218	172
		30					73	58	92	72	110	87	129	102	148	117	166	131	185	146
4320	48	18					86	68	109	86	131	103	153	121	176	139	198	156	220	174
		24					72	56	90	70	108	85	126	100	145	114	163	129	181	143
		30							77	60	92	73	108	85	123	97	139	109	154	122
5760	48	18							82	65	99	78	115	91	132	104	149	117	165	131
		24							68	53	81	64	95	75	109	86	123	97	136	108
		30									69	55	81	64	93	73	104	82	116	91
7200	60	18									78	61	91	72	104	82	117	92	130	103
		24									69	51	75	59	86	68	97	76	108	85
		30											64	51	73	58	82	65	92	72

FLORIDA BUILDING CODE (High Velocity Hurricane Zone)

ALUMINUM STANDS FOR ROOF TOP EQUIPMENT

F&L ALUMINUM PARTS, INC.
2087 N. POWERLINE RD. SUITE #1
POMPANO BEACH, FL. 33069

DRAWN BY: C.R.
DATE 11/15/23
23-242 DRAWING No
SHEET 10 OF 10

REV. No.	DESCRIPTION	DATE	REV. No.	DESCRIPTION	DATE
1	-	-	3	-	-
2	-	-	4	-	-

TILTECO INC.
TILLIT TESTING & ENGINEERING COMPANY
6355 N.W. 36th. St. Ste. 305, VIRGINIA GARDENS, FL 33166
Phone : (305)871-1530 . Fax : (305)871-1531
e-mail: tilteco@aol.com
CA-0006719
WALTER A. TILLIT Jr. P.E.
FLORIDA Lic. # 44167

WALTER A. TILLIT JR. LICENSE No. 44167 STATE OF FLORIDA PROFESSIONAL ENGINEER

P.E. SEAL/SIGNATURE/DATE

PRODUCT REVISED
as complying with the Florida Building Code
NOA-No. 23-1206.01
Expiration Date 05/15/2029
By
Miami-Dade Product Control